Gear Box Design Notes for Xtremachen 7

Gear Box Design
Motor Selection

- Resistance of circuit will reduce maximum available I_{Motor}. Motor Torque will be correspondingly reduced.
- The voltage drop across the circuit resistance will affect V_{Motor}. Motor speed is affected proportionally.
- Top speed is affected by the added voltage drop and any parasitic mechanical losses in the drive train.

Real World Model Robot Motor

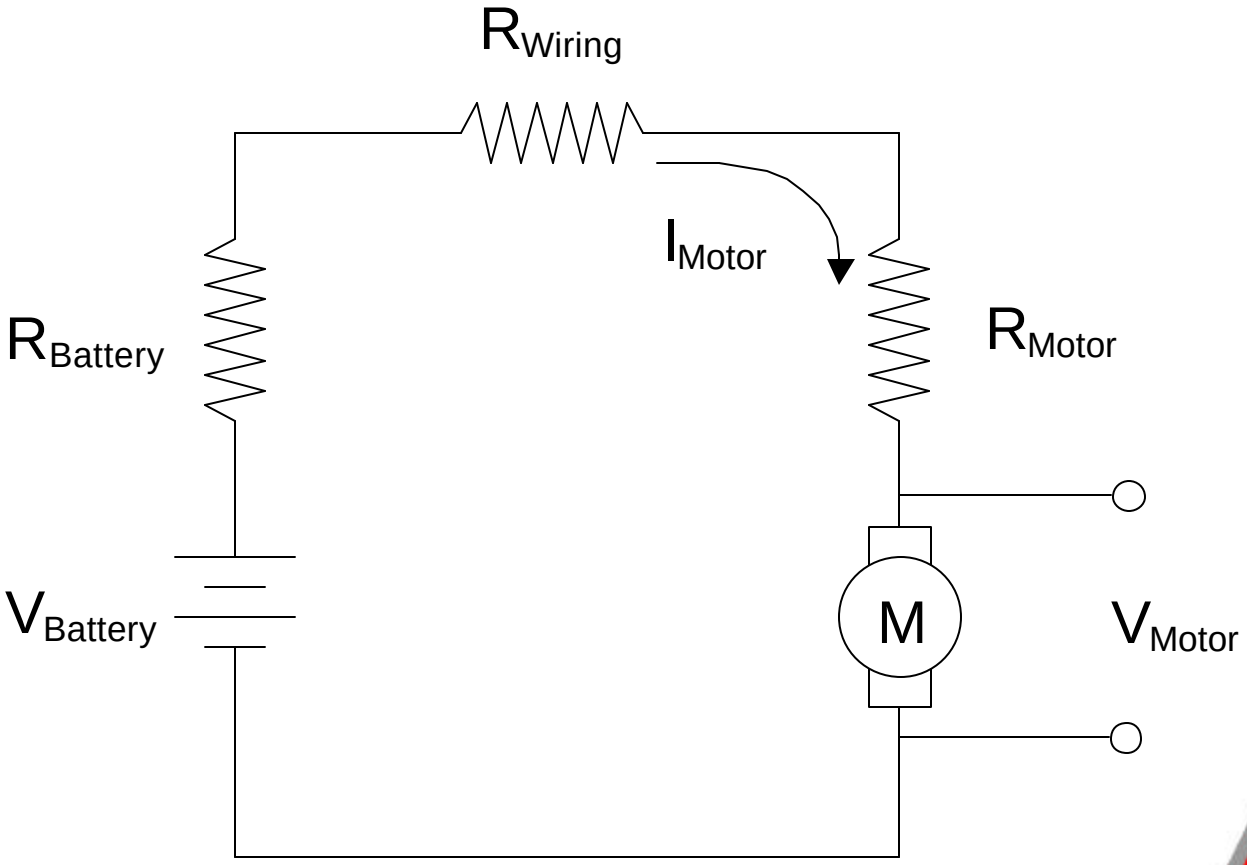

$R_{wiring} = R_{cable}, R_{connector}, R_{speed\ controller}$

Real Life Scenario
Torque

- V_{batt} = 12V
- V_{system} = 9.2V
- R_{batt} = 15mΩ
- R_{cable} = 3.8mΩ
- $R_{connector}$ = 50mΩ (5 connections)
- $R_{speed\ controller}$ = 0.0148Ω
- $R_{CIM\ motor}$ = 0.112Ω
- k_T = 0.0208 Nm/A

$T = k_T * I$

k_T = Motor torque constant

I = Current

Torque is proportional to current

I = V / R

I = 9.2V / 0.1956O

I = 47A

- Theoretical Max Torque = 2.22Nm at 107A
- Calculated Max Torque = .978Nm at 47A

Using the Model to Get Better Robot Performance

- Realize that torque drops with increasing speed.
- Analyze the actual motor circuit and design gearing for the actual available torque.
- Be aware that because of mechanical and electrical losses, the motor top speed is reduced.

Xtremachen 7 GearBox Design Calculations

	Bosch Drill Motor			CIM Motor	
	ratio	1		ratio	1
	max rpm	19670		max rpm	5500
	stall torque (Nm)	0.87		stall torque (Nm)	2.224576
	Power (est)	448.0147		Power (est)	320.316
	Stall Current (A)	127		Stall Current (A)	107
	Available Current	50		Available Current	45
	Available Torque	0.34252		Available Torque	0.935569
	Bosch Gearbox Final Output			CIM Gearbox Final Output	
	ratio	42.66667		ratio	12
	max rpm	461.0156		max rpm	458.3333
	Avail torque (Nm)	14.61417		Avail torque (Nm)	11.22683
	Chain Drive				
	ratio	1			
	max rpm	459.6745	horsepower	0.417027127	
	Avail torque (Nm)	25.84101			
	Avail torque (ft-lbs)	19.07066			
	Wheel				
	ratio	1		One rev of gearbox gear = x revs of wheel	1
	max rpm	459.6745			
	Avail torque (Nm)	25.84101			
	Dia(in.)	4		Goal	
	Top Speed (ft/sec)	8.022833		Top Speed (HI)	12
	Tangent Force (lbs)	114.3465		Tangent Force (Lo)	150

Xtremachen 7 GearBox Design Calculations

Chiaphua			**Chiaphua Stage 1**			**Chiaphua Stage 2**	
Dia. Pitch	32		Dia. Pitch	32		Dia. Pitch	32
# Teeth	28		# Teeth	42		# Teeth	12
Pitch Dia	0.875		Pitch Dia	1.3125		Pitch Dia	0.375
Max RPM	5500		Ratio	1.5			
			Max RPM	3666.667		Max RPM	3666.667
Bosch Drill			**Bosch Stage 1**			**Bosch Stage 2**	
Module	0.7		Module	0.7		Dia. Pitch	32
# Teeth	15		# Teeth	80		# Teeth	12
Pitch Dia (in.)	0.413386		Pitch Dia (in.)	2.204724		Pitch Dia	0.375
Max RPM	19670		Ratio	5.333333			
			Max RPM	3688.125		Max RPM	3688.125
			Gear Box Output			**Output Sprocket**	
			Dia. Pitch	32		Pitch	0.5
			# Teeth	96		# Teeth	16
			Pitch Dia	3		Pitch Dia	2.562915
			Ratio Bosch	42.66667			
			Ratio CIM	12		**Drive Sprocket**	
			Max CIM RPM	458.3333		Pitch	0.5
			Max Bosch R	461.0156		# Teeth	16
						Pitch Dia	2.562915
						Ratio	1

Xtremachen 7 GearBox Design Calculations

R_Batt	1.10E-02				I_Max	254.5319
V_Batt	12				V_AfterBatt	9.20E+00
R_CIM	0.11215				I_Bosch	6.75E+01
R_Bosch	0.094488				I_CIM	5.98E+01
R_V884	0.0148					
R_MaxiBreaker	0.005					
R_Term	0.011					
R_(Cable+MaxiBlock)	0.011					
			R_Cable+I	I_Max	I_Bosch	I_CIM
			0.011	254.5319	6.75E+01	5.98E+01
R_BoschSys	0.136288		0.02	242.8991	64.204183	57.24539
R_CIMSys	0.15395		0.03	231.1652	60.900851	54.68175
			0.04	220.5163	57.925015	52.33313
			0.05	210.808	55.229687	50.17432
R_TotalMotor	0.036145		0.06	201.9206	52.776558	48.18377
			0.07	193.754	50.534065	46.34293
R_TotalBatt	4.71E-02		0.08	186.2236	48.475952	44.63584
			0.09	179.2577	46.580192	43.04866
I_Max	254.5319		0.1	172.795	44.828159	41.56935

Xtremachen 7 GearBox Design

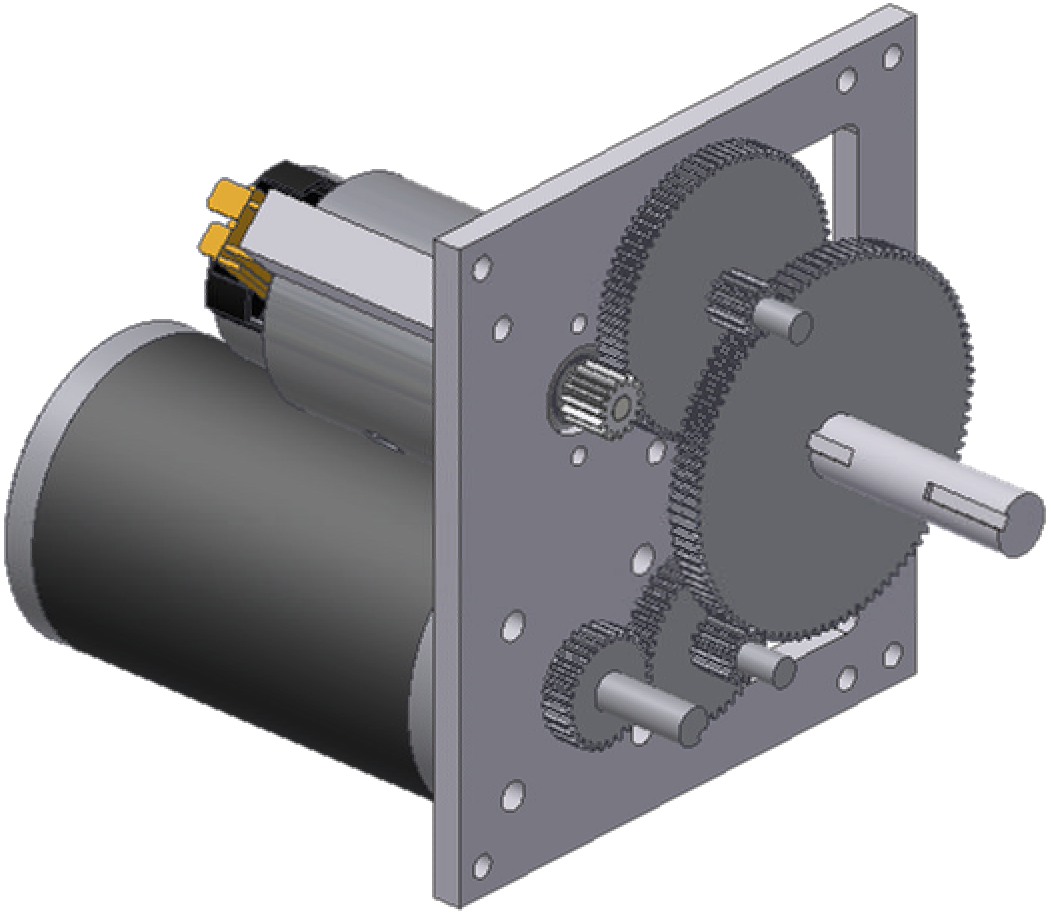
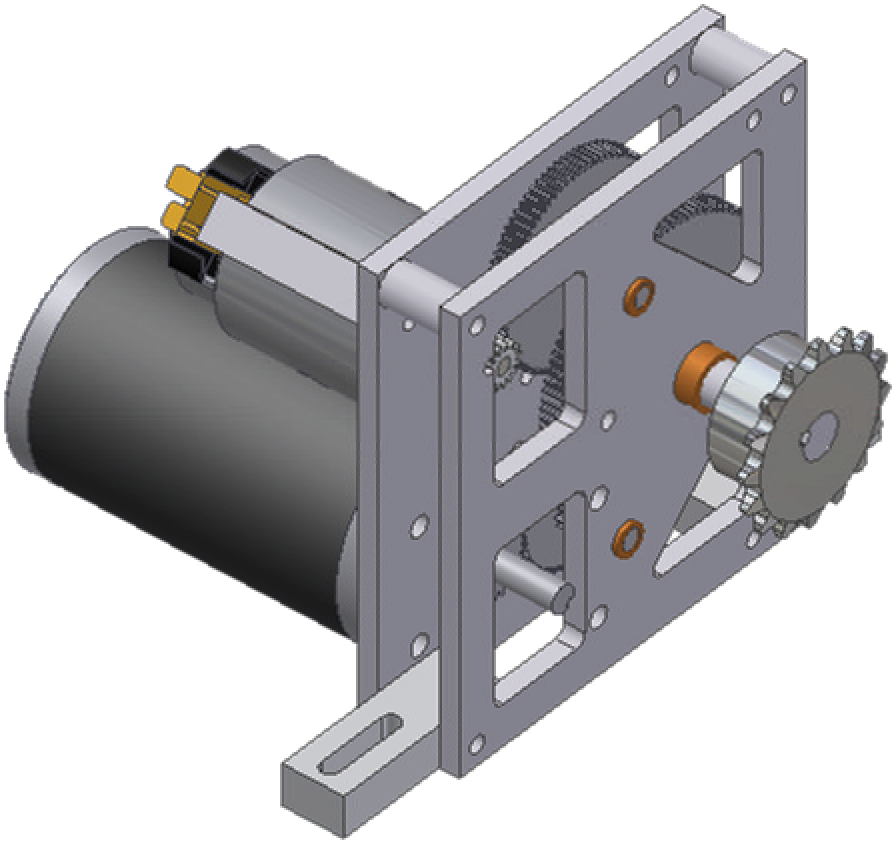
Xtremachen 7 GearBox Design